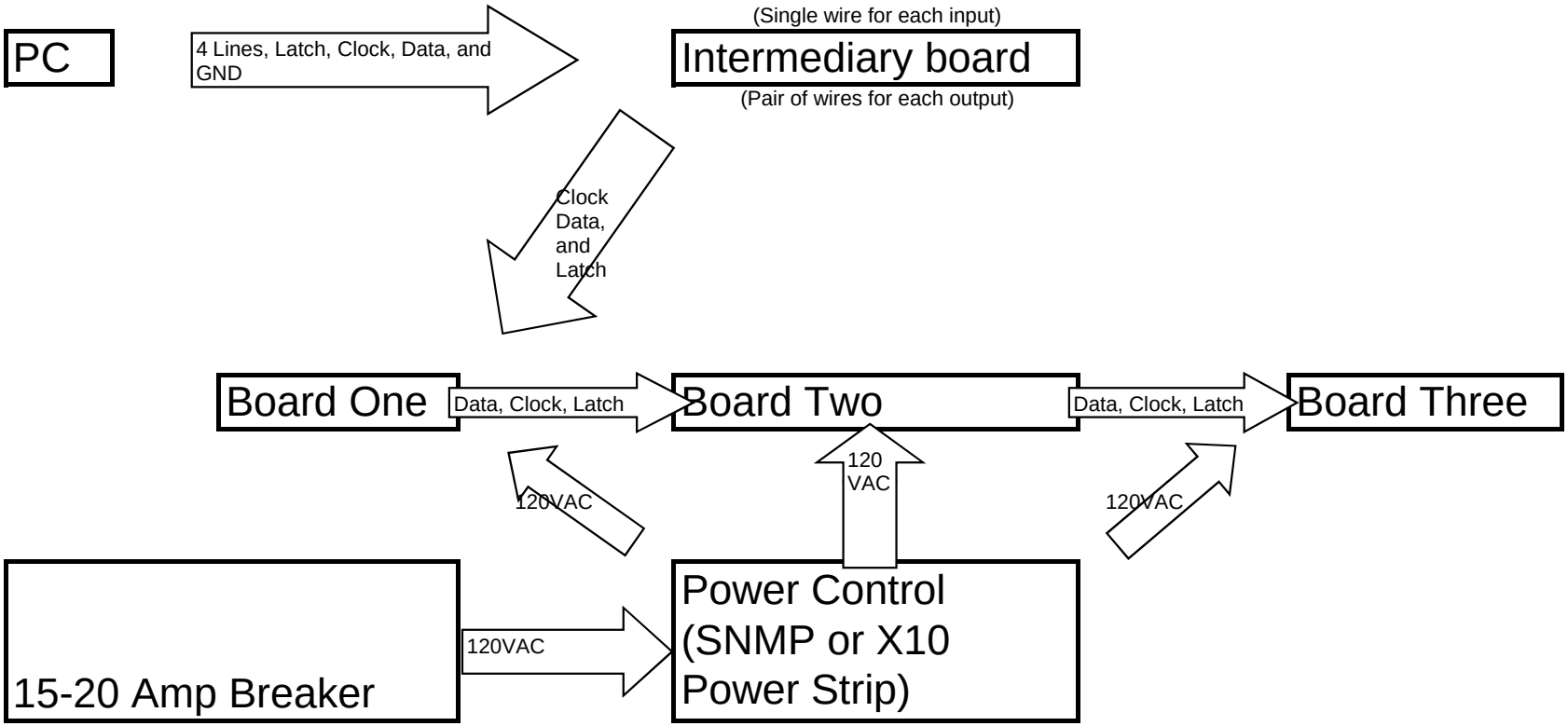
PC
4 Lines, Latch, Clock, Data, and GND
(Single wire for each input)
Intermediary board
(Pair of wires for each output)
Clock Data, and Latch
Board One
Data, Clock, Latch
Board Two
Data, Clock, Latch
Board Three
120VAC
120 VAC
120VAC
15-20 Amp Breaker
120VAC
Power Control (SNMP or X10 Power Strip)